Mr. Robotopus

Project Proposal

Fire Fighting Robot Competiton

Engineering Team:

Alabdali, Tareq

Alwazzan, Adnan

Dragoeva, Vesela

Saengsouriyo , Henry

Sanchez, Reggie

Sigmon, Timothy

Stodulski, Richard

SAN DIEGO STATE UNIVERSITY

Leadership Starts Here

Sponsor:

Senior Design Lab

Department of Engineering

Abstract:

The objective of the project is to create a robot that can autonomously navigate through a course while searching for and distinguishing a candle with a real flame from a decoy electronic candle. Once the candle is found and determined by the robot to be the real flame the robot will then need to extinguish the flame with water using no more than 100 ml. The project has a strict budget of $800. The robot will also be competing with others teams robots to try and put the candle out in the fastest time.

Project Description:

The project involves creating an autonomous robot from an $800 budget to compete in the Robot Fire Fighting competition where the robot must extinguish a flame from a candle using no more than 100ml of water while also not being deceived by the decoy electronic candles. In this Robot Fire Fighting competition there will be two phases:

1) In the first phase each team is allowed 3 separate runs to try and find the real candle and extinguish it in the fastest time possible while not being deceived by the decoys. If the robot is deceived by a decoy electronic candle then the robots run is over and is unsuccessful. In the competition rules the program in the robot may store in memory the location of the real candle and in its subsequent run may immediately proceed to the memory's stored location of the candle and extinguish the candle without wasting time to explore the course and locate the real candles location all over again. The fastest time of the three runs is used for scoring in the first phase.
2) In the second phase the real candle and each decoys location may be changed and each teams' robot will simultaneously search for the real candle. If a robot try's to extinguish a decoy electronic candle in the second phase it will not count against it as in the first phase. Furthermore, in the second phase the teams' robots are allowed to interfere with their competitors robots by means of ramming or spraying the other robots with water. No offensive weapons are otherwise allowed.

Our team has been tasked with this competition and must design, build, and test an autonomous Fire Fighting Robot. This design has been given general guidelines to allow creativity and flexibility in each teams design. To make our design realized, our team has decided that we want to build a relatively small robot for various reasons, some of which are:

- More agility and maneuverability
- Less cost in motors and other parts
- and Speed

Furthermore, our team has decided to use a Raspberry Pi microcontroller for navigation (camera and sensors) as well as a Pic32 microcontroller to control and drive the motors.

The Raspberry Pi will particularly be optimized by using a Noir 8MP camera with a filter in order to detect flames. It will also be used to drive the ultra-sonic sensors for distance navigation as well. Additionally a temperature sensor will be used for verification of candle flame before giving water pump command. We have done general electrical load calculations and schematic design to ensure that our chosen equipment can be both properly powered and installed on our robots chassis

Block Diagram:

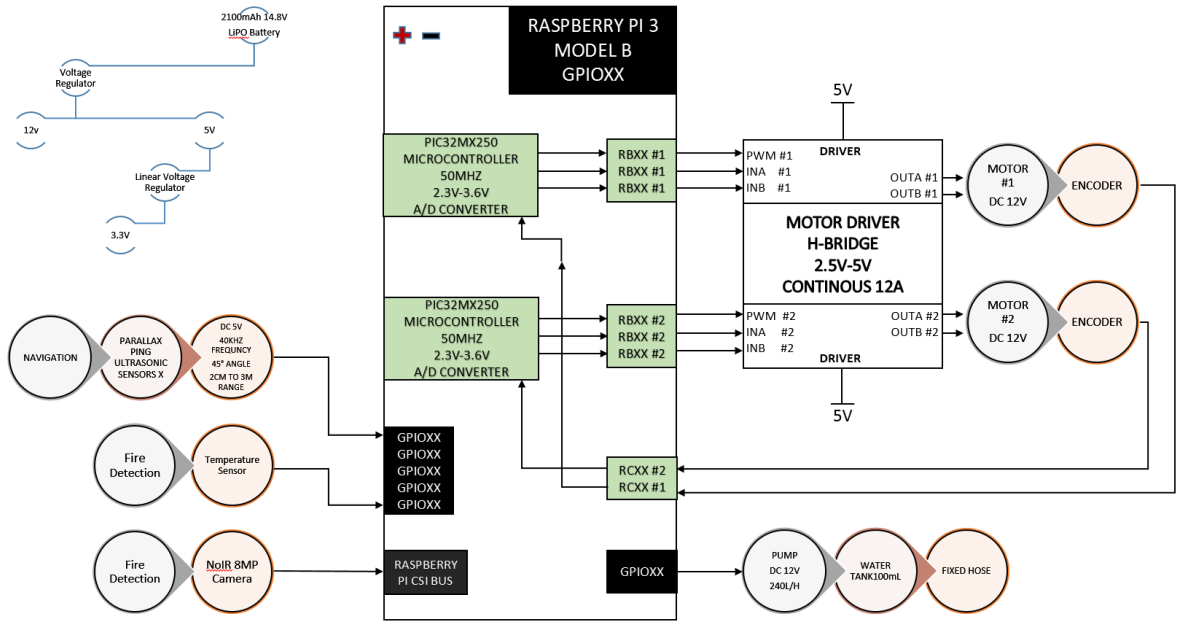

Logic Flowchart:

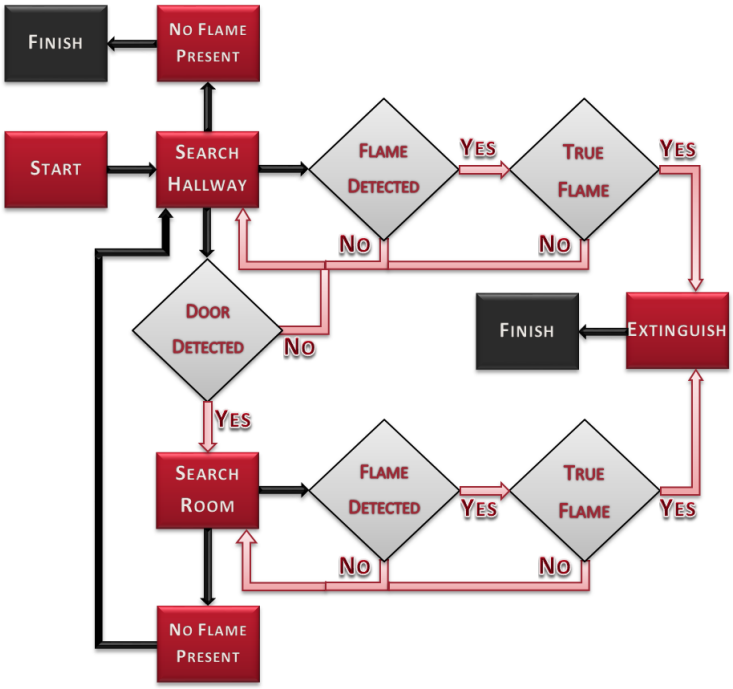

Mock-Up Illustrations:

Front View:

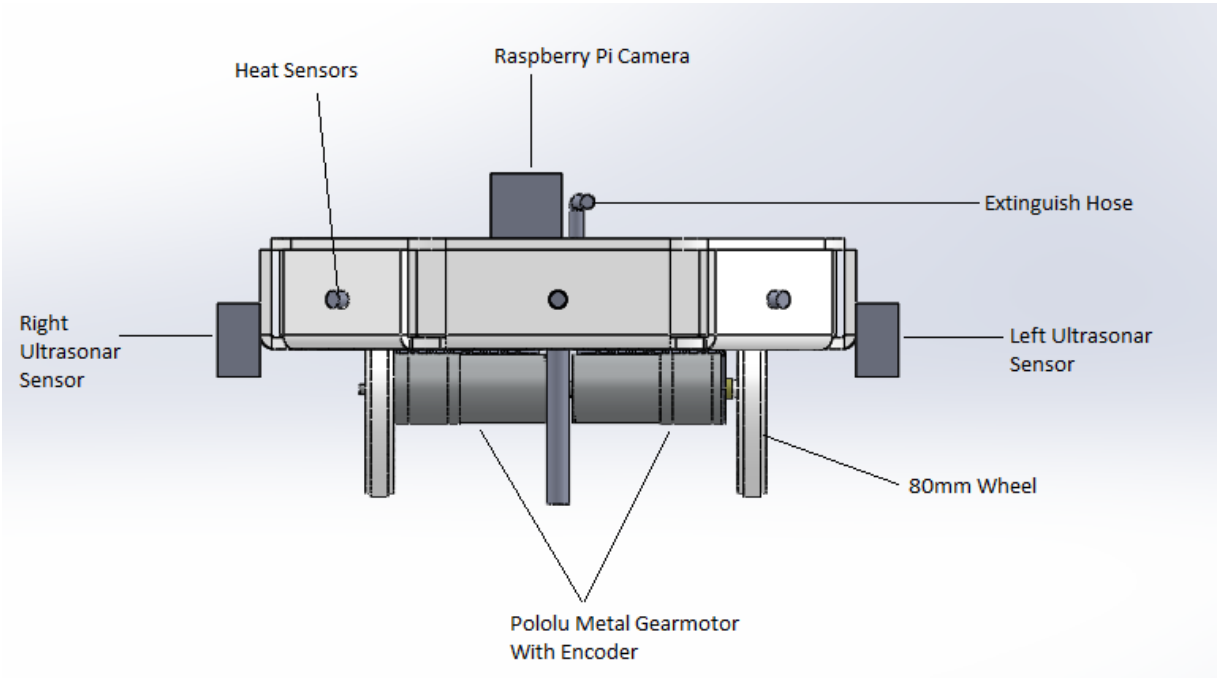

Side View:

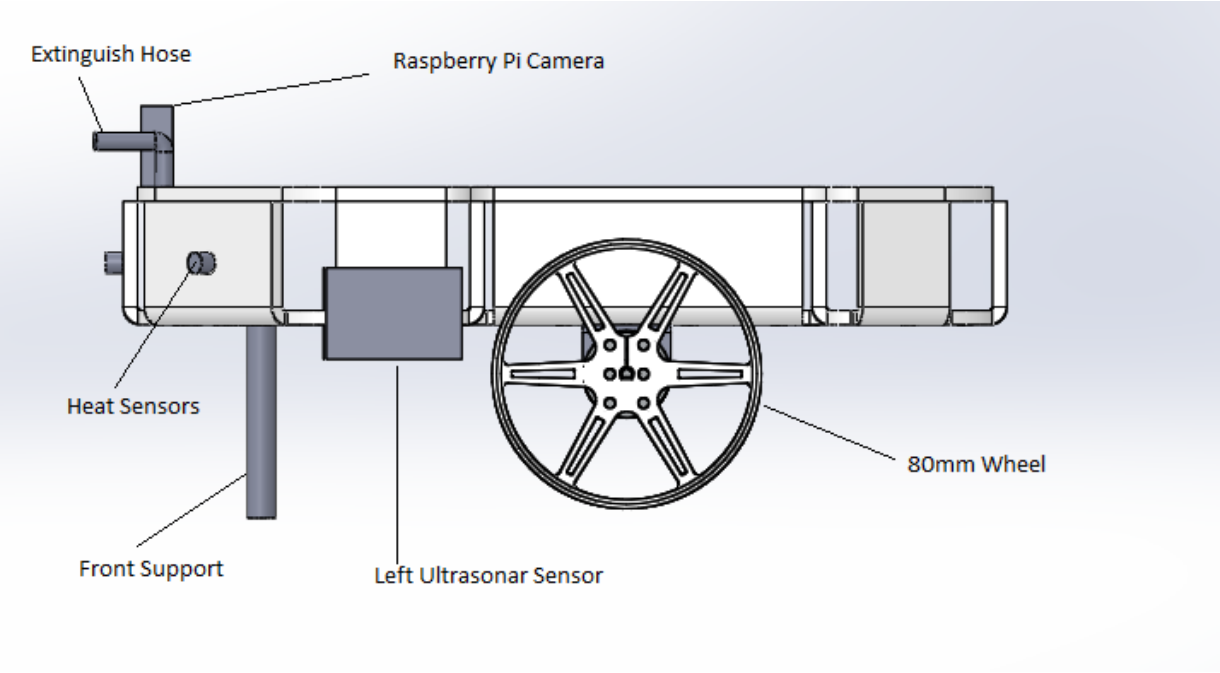

Performance Requirements:

<u>Speed:</u>

- Maximum speed of 2 m/s

<u>DC Motors:</u>

- 12V Metal motors with dimensions of 25Dx48L mm
- 1030 RPM
- 9.68:1 metal spur gearbox

<u>Wheel:</u>

- Wheel diameter will be in the range of 80 mm – 90 mm

<u>Fire Detection Devices:</u>

- Ultrasonic sensors for range performance 0.2m-1.25m & covers full front of 180 degrees
- Infrared temperature sensor measures and senses temperature rise within 0.15m-0.3m
- Raspberry Pi NoIR Camera, filtered ambient light

<u>Battery Power:</u>

- 14.8V & 2100mAh LiPo battery
- Three different voltages 12V, 5V, 3.3V that are converted by a voltage regulator
- Features a high current output

- Can be charged quickly and able to run for 10 minutes

Extinguishing:

- A water pump motor of 12V that have to turn off the candle 10 cm far away
- The water pump motor features a rate of 240 liters per hour

Testing and Verification:

Motors:

Generally speaking, our DC Motor will be tested to see its functionality and performance and to ensure that it meets the requirements. There are many ways to test a DC motor, the way we will approach is to supply the motor with a voltage via a power supply. After that, we will make a use of the function generator to supply the PWM. Then, we will put a load onto the motor by using a wheel and place it on the ground to see how fast it spins and we can calculate the RPM through a laser Tachometer.

In addition, to observe the full capability of our motors, the power input of the motor will vary from 0v to 12v max. On the other hand, the encoder connected to the motor will be supplied with a fixed voltage of 5V. Following this test further, our motor will also be tested in a connection with the H-bridge. This way, we can see how the motor interacts with the H-bridge when we re-route different currents directions to the motor to make sure that they will absorb the same current in order to give us the same RPM.

Sensors:

Ultrasonic sensors will be tested whether the configured array is covering the needed full front of 180 degrees by placing obstacles in the crucial angle border lines and also will be tested for range performance (sensitivity from 0.20m to 1.25m). The close distance will be tested by measuring how close and precise the robot will go and stop in front of the candle in order to extinguish the flame. The longest range detection will be tested by letting the robot to navigate through the widest section (8’→~2.5m) in the hallway, and through the narrowest section (4’→~1.2m) in the lab room. Last but not least it should detect and go around a corner/door without making contact with any of the edges.

The infrared temperature sensor will be tested for its range of detection. This will be established and synchronized with the water pump. Our target is to be able to extinguish the fire within the range of 0.3m (1') at the same time not closer than 0.15m (0.5'), therefore the IR temperature sensor is going to be tested whether it measures and sense temperature rise within 0.15-0.3m.

The Pi NoIR camera and the additional ambiance light cutting sensor will be tested for their sensitivity towards infrared light. The later will be executed by taking a still picture of a flame and LED light exposed in a normal i.e. laboratory ambient light and then results will be evaluated by the different light intensity and type of light that make it through the camera and filter lenses.

Water Pump Motor:

Since the robot needs be 10 cm far away from the candle, the water pump motor will be tested to see how efficiently the water is being deployed inside the tube and then sprayed out of the nozzle to successfully extinguish the flame.

Benchmarks:

1) The robot will have to drive smoothly in all directions with quick acceleration response.
2) Must be able to detect the difference between real candle flame and LED candle light.
3) Navigate and detect flame in the hall and all rooms.
4) Capable of detecting all objects and navigate accordingly.
5) The robot will be very light due to small compact design.
6) The robot will be able to move in high speed due to low weight.
7) The navigation sensors will be able detect walls within range of hallways and rooms.
8) The temperature sensor will be able to detect the real candle within 0.3m or 1'.

Milestones:

Date:	Milestone:	Requirements:
10-24-16	Robot Moving Straight	Robot to move in a straight line by using the H-Bridges, Battery, Motors, and the PIC32.
10-29-16	Chassis Prototype Complete	Have the chassis in order to implement all of the hardware.
11-1-16	Detect Flame	Use the Raspberry Pi, the NOIR camera, and the camera IR filter to detect the flame of the candle.
11-14-16	Test Robot Navigation	Robot successfully navigates through the map and identifies candles/fake candles.

Budget:

Cost Analysis

The goal of our team is to utilize the provided subsidy in the most efficient way. After carefully considering our design and needs we decided on the following fund allocation:

i. Sensors Unit: 31%

- Ultrasonic range, IR temperature, Camera, IR Lens etc.

ii. Locomotion Unit: 25%

- Motor, Motor Driving Control etc.

iii. Power Unit: 14%

- Battery, Voltage regulator, Switch etc.

iv. Control Unit: 14%

- Raspberry Pi, and Microchip Microcontroller PIC32 series

v. Body: 7%

- Chassis, Wheels, Mounting hubs, Gear motor brackets etc.

vi. Extinguisher Unit: 5%

- Motor water pump, Switch etc.

vii. Other Expenses: 5%

- Spare parts, and miscellaneous expenses etc.

The total amount of the itemized percentage values above is $798, the greatest part of our budget, almost a half of it, is provisioned for sensors and locomotion respectively units. Another quarter is assigned for the control and power units, and last but not least we allocated some funding for other expenses such as spare parts, and damaged components during design and integration process.

……. Fig.1 Can make changes working canvas……

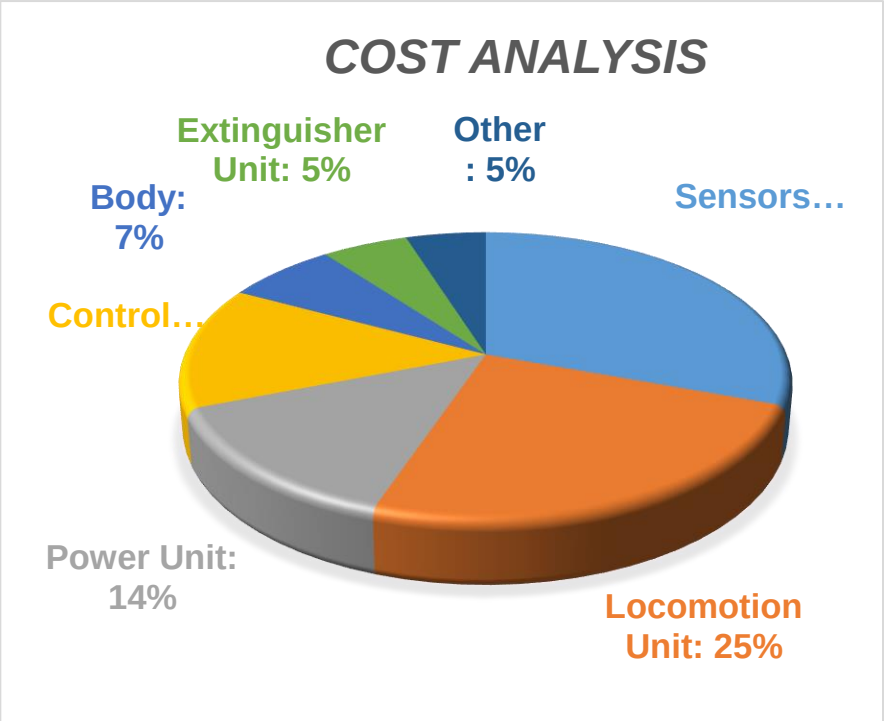

…… Fig. 2 is as picture……

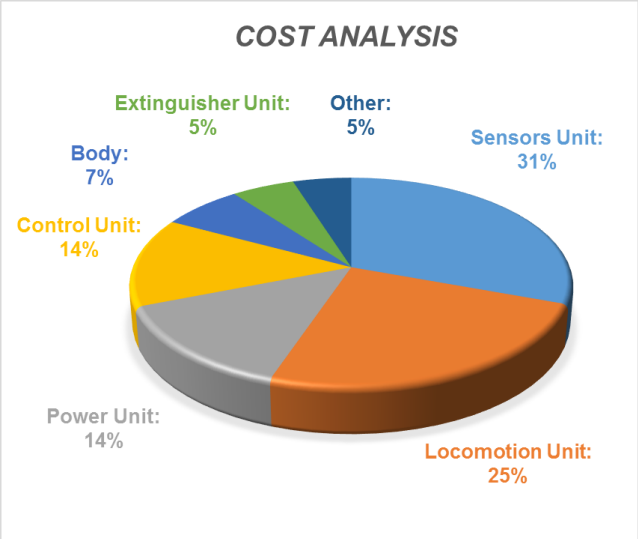

MR·ROBOTOPUS

FIRE FIGHTER ROBOT

Our Team:

Seven Electrical and Computer Engineering students from San Diego State University are putting all of their time and efforts into building a Fire Fighting Robot.

Our Vison:

To build a Fire Fighting Robot in a very small and compact design, that is fully automated and very accurate in precision, speed and efficiency.

Our Design:

Small, compact and low weight design gives the robot ability to be agile, maneuver at higher speeds and lower costs in parts.

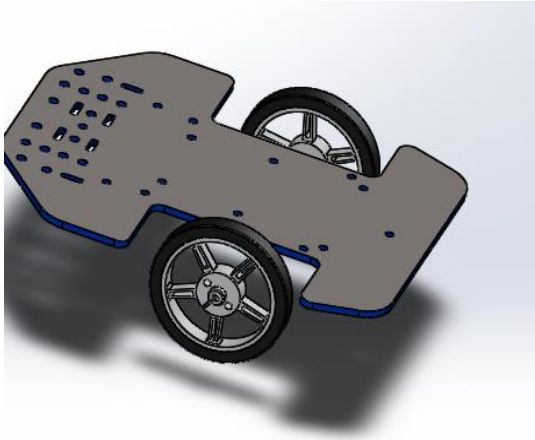

Sponsored by:

SAN DIEGO STATE UNIVERSITY

Mr. Robotopus

SDSU
Senior Design Day

Tuesday
13 December 2016

The Challenge:

Building a fully autonomous robot that can navigate a course while avoiding objects, find & detect a flame from a candle, and do it in the fastest time to beat the competitors. Our design accommodates these specifications to fit in a very small and compact robot.

Engineers:
Alabdali, Tareq
Alwazzan, Adnan
Dragoeva, Vesela
Saengsouriyo , Henry
Sanchez, Reggie
Sigmon, Timothy
Stodulski, Richard